ADEY

KE KELIT®
CLIMATE CONTROL SYSTEMS

MagnaClean®
Professional3 Sense

Installation and servicing

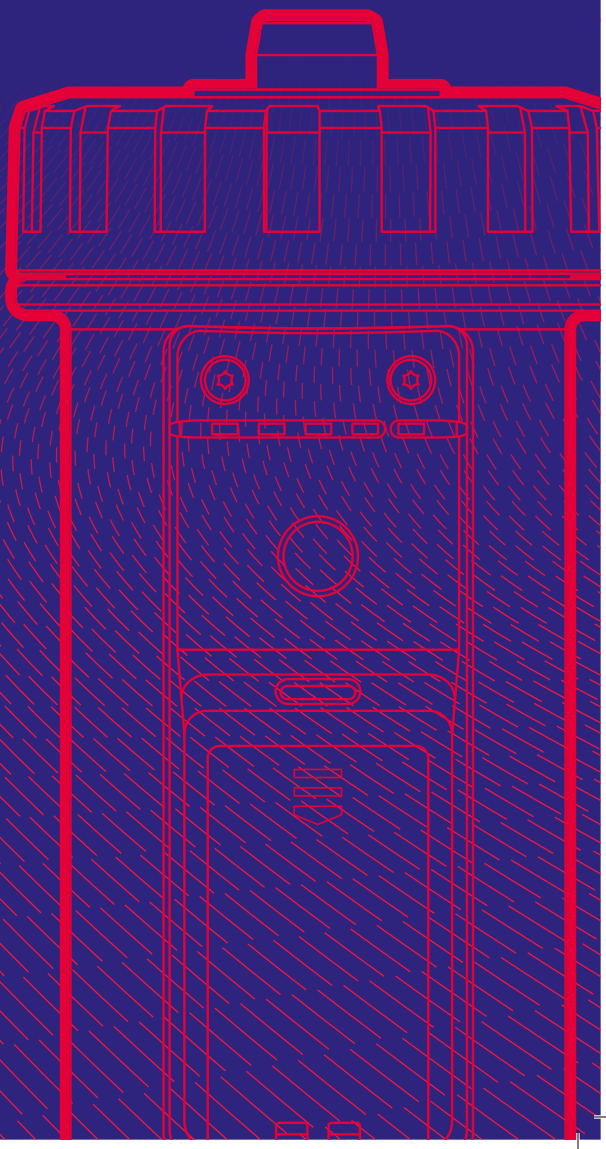

THE QUEEN'S AWARDS FOR ENTERPRISE: INNOVATION 2017

THE QUEEN'S AWARDS FOR ENTERPRISE: INTERNATIONAL TRADE 2018

MagnaClean Professional3 Sense®

MagnaClean Professional3 Sense®, the only Wi-Fi enabled magnetic filter. ADEY's unique *Sense*® technology not only provides high performance system protection, it also predicts potential system problems and offers connected preventative maintenance.

IMPORTANT – Always follow the electrical & safety standards when installing a filter.

These instructions are designed to support installers in the safe and effective installation and servicing of the filter. It is recommended that the filter is installed by a qualified heating engineer.

Installation overview

MagnaClean Professional3 Sense can be installed anywhere before the boiler. To achieve the best level of protection, it is recommended that the filter is fitted after the last radiator and before the boiler. This also ensures a system flush can be carried out using a *MagnaCleanse*® on the return.

Open vented system

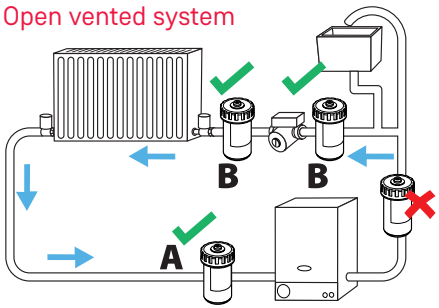

Combi/sealed system

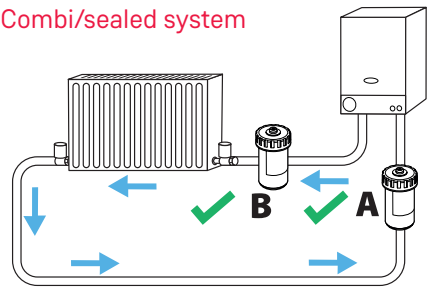

Note: In both diagrams, position A is best practice, Position B is suitable if space is tight on the return.

The following instructions are designed to support engineers in the safe and effective installation and servicing of *MagnaClean Professional3 Sense* and should be followed at all times.

This must be completed prior to installation:

Pre-Installation checklist	
Have you downloaded the ADEY ProClub® App from Google Play or App Store?	
Has the homeowner got Wi-Fi?	
Is the homeowner happy to provide you with the password for installation? (Essential) Note: The homeowner's Wi-Fi password is not stored.	
Check Wi-Fi connectivity at proposed filter location to ensure the filter can connect and communicate with the homeowner's Wi-Fi router once installed.	
Have you recommended to the homeowner to download the homeowner App?	
Confirm homeowner details to be used for warranty registration	
Ensure guide and filter spanners are left with the homeowner	

In App filter set-up

1

Download the ADEY ProClub App from Google Play or App store

2

ADEY ProClub

Log in to or register on the Adey Proclub App

3

Select the *MagnaClean Sense®* tile

4

Remove battery tab from filter. We recommend the batteries are replaced every two years

5

Connect the product to the customer's Wi-Fi router following the instructions on the App

ADEY ProClub App

MagnaClean Professional3 Sense **Dashboard Overview:**

MENU
Enables easy navigation of App

ADD A NEW FILTER
To set up the filter

ALERTS
Informs you of the filter status including:
Wi-Fi connection
Magnetite build-up
Service due date
Low battery

FILTER SEARCH FUNCTION
Searches for customers by name or the filter serial number

FILTER STOCKLIST
Displays customers' names, magnetite capture status and the battery level
Select filter to view details

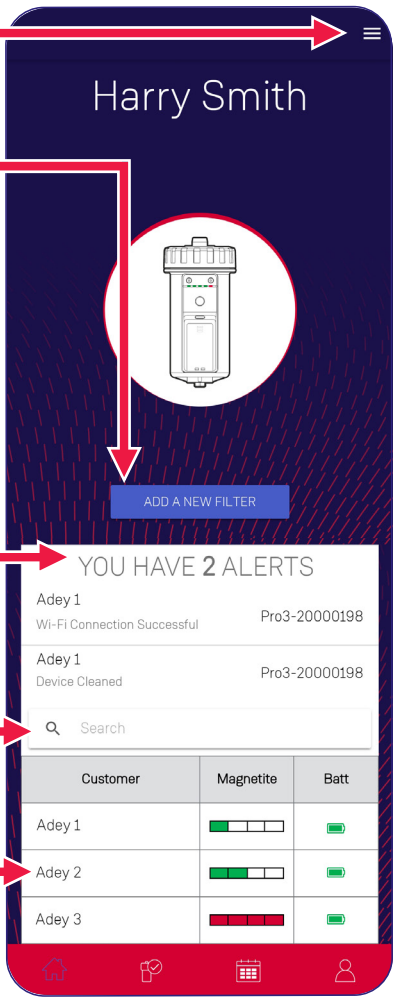

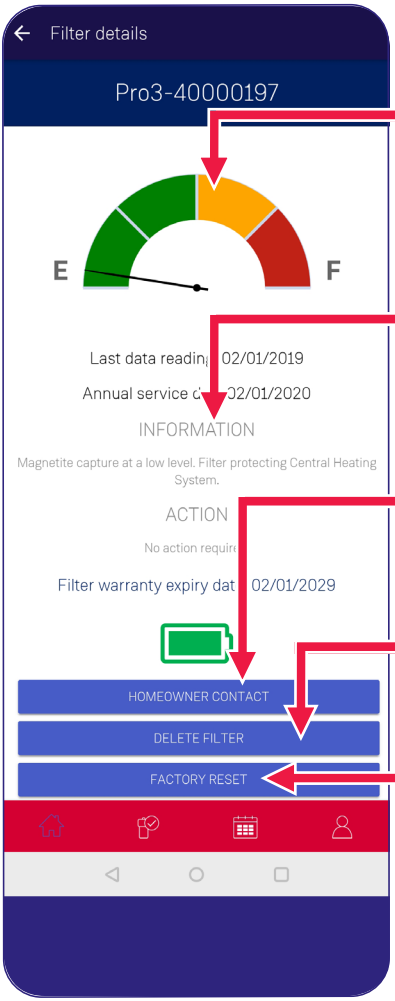

MAGNETITE CAPTURE GAUGE

Green = Magnetite capture level is low

Amber = Magnetite capture level is medium

Red = Magnetite capture level is high

INFORMATION

Informs the installer about how the **system** is **performing**, including recommended courses of action where appropriate

HOMEOWNER CONTACT

Access **customer contact** details

REMOVE FILTER FUNCTION

Delete filters that you no longer service

FACTORY RESET

Restores the product to an 'out of box' state

The filter is disconnected from the Wi-Fi and is deleted from the Installer dashboard

Please visit adey.com for further App details and support

New filter installation - Always ensure the filling loop is fitted after the filter.

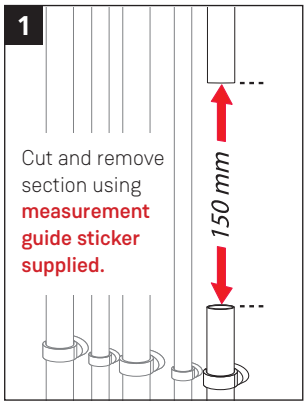

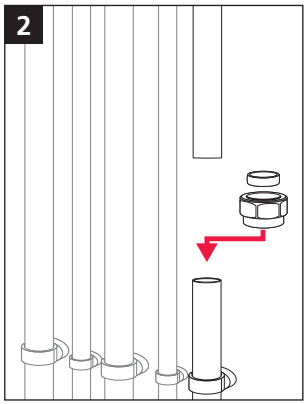

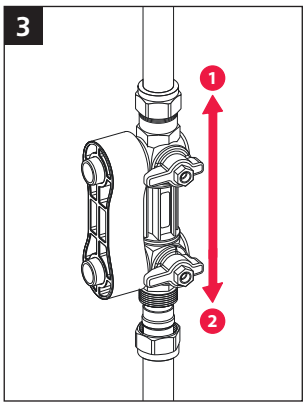

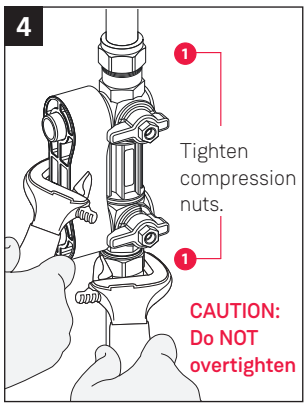

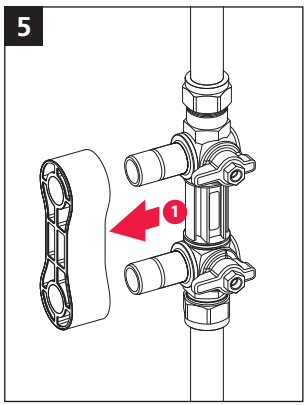

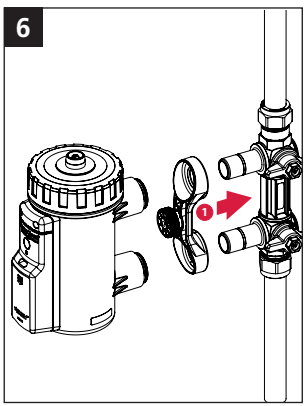

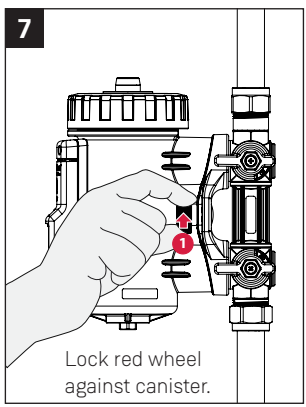

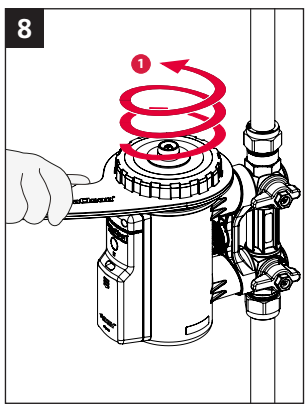

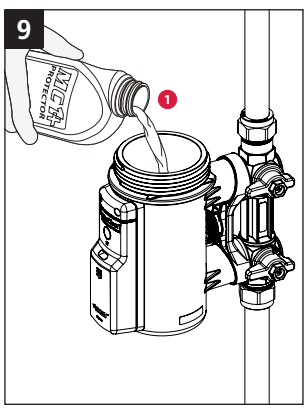

10

Hand tighten.

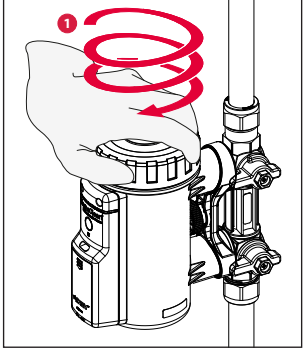

11

Tighten by a ¼ turn.
Important - Do NOT overtighten.

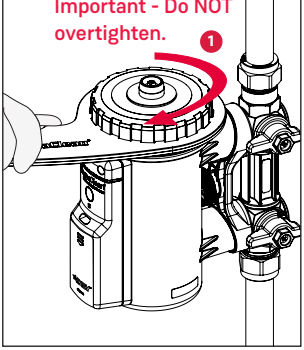

12

Set filter to clean mode. Press and hold button for 6 seconds using the reset tool provided.

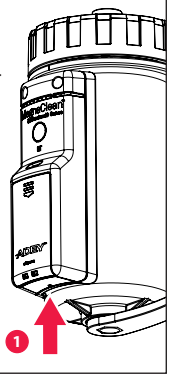

13

1 - Turn valves on.
2 - Vent.
3 - Wipe filter dry.

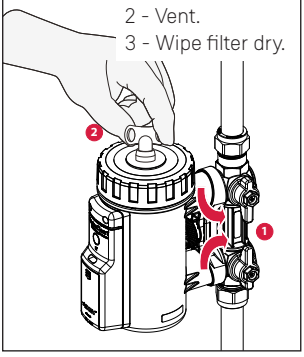

14

The *MagnaClean Professional3 Sense* filter will now appear in your ADEY *ProClub* App product dashboard. Select product to view the filter status.

15

ADEY® ProClub

Your customer's warranty registration is now complete. Your ADEY *ProClub* loyalty points will automatically be added to your account.

Servicing

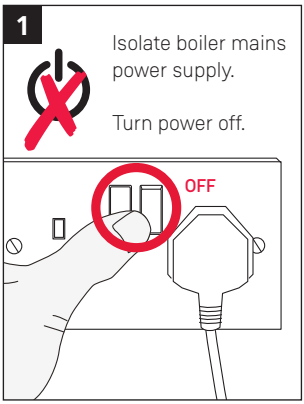
1
Isolate boiler mains power supply.
Turn power off.
OFF

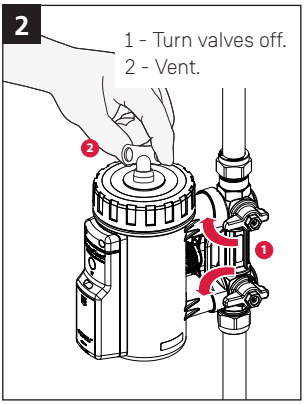
2
1 - Turn valves off.
2 - Vent.
2
1

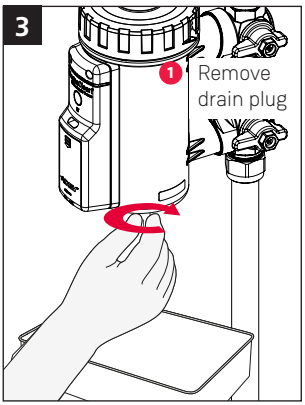
3
1
Remove drain plug

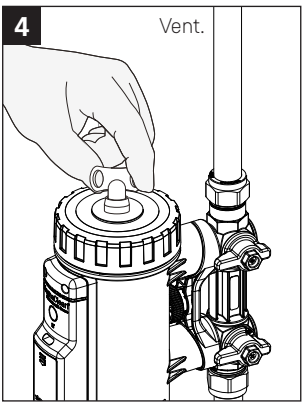
4
Vent.

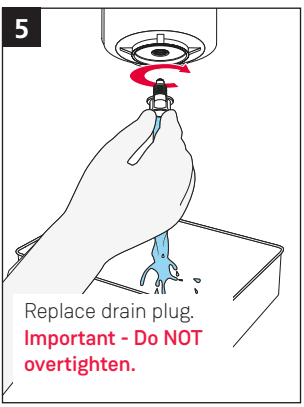
5
Replace drain plug.
Important - Do NOT overtighten.

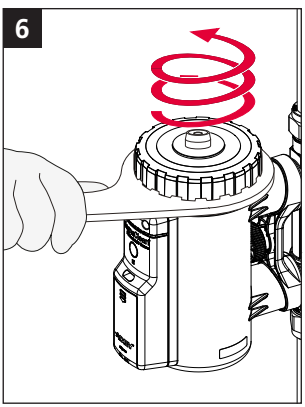
6

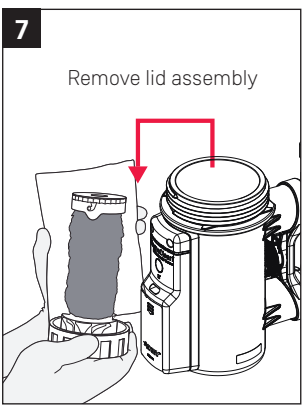
7
Remove lid assembly

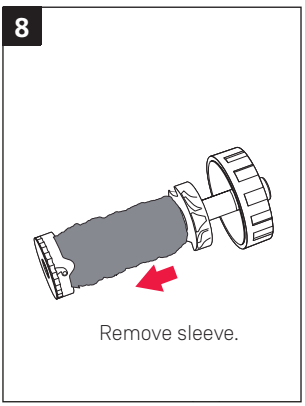
8
Remove sleeve.

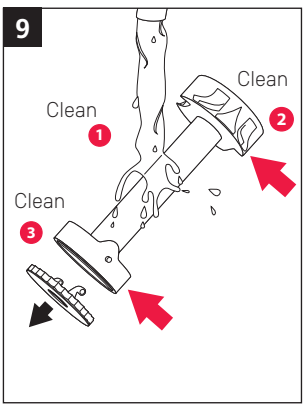
9
Clean
1
Clean
2
Clean
3

10

Dose

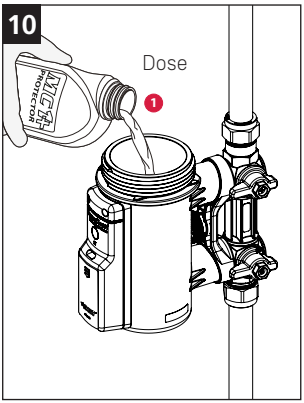

11

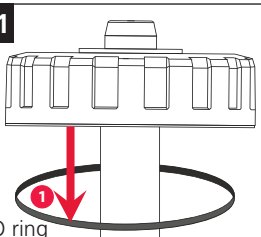

O ring

The lid seal should be checked for wear when servicing *MagnaClean*®. It is Best Practice to replace the lid seal at each service

12

Hand tighten.

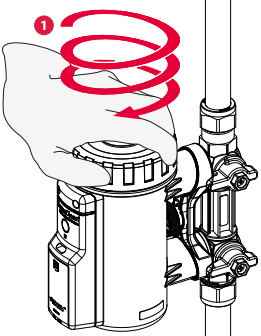

13

Tighten by a ¼ turn. **Important - Do NOT overtighten.**

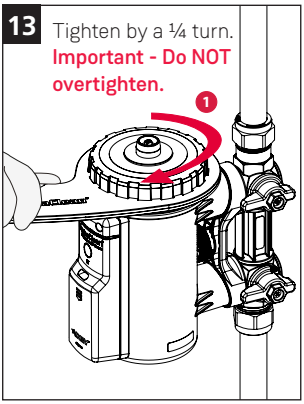

14

Set filter to clean mode. Press and hold button for 6 seconds using the reset tool provided.

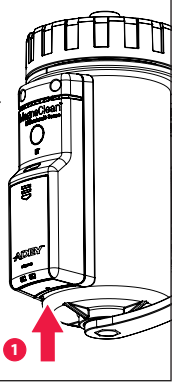

15

1 - Turn valves on.
2- Vent.
3- Wipe filter dry.

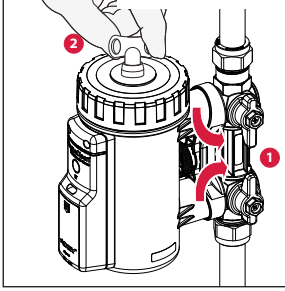

16

Turn on boiler power supply.

Turn power on.

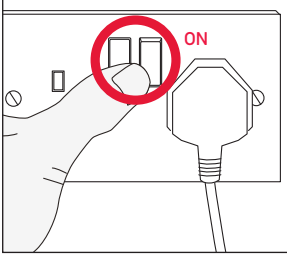

IMPORTANT: Always clean the magnet and reset the product when the filter lid has been opened.

Quick-release trigger

MagnaClean Professional3 Sense incorporates a secure, quick-release, trigger which enables the filter to be removed and re-installed in seconds. The connections enable easy and swift filter removal during annual servicing or to undertake a *MagnaCleanse* system flush. This also makes it ideal for systems where there is little room to install a filter.

The following instructions are designed to support engineers in the safe and effective servicing of *MagnaClean Professional3 Sense* using the quick-release trigger.

NOTE: Follow servicing steps 1, 2, 3, 4 and 5 before following Quick-release trigger instructions.

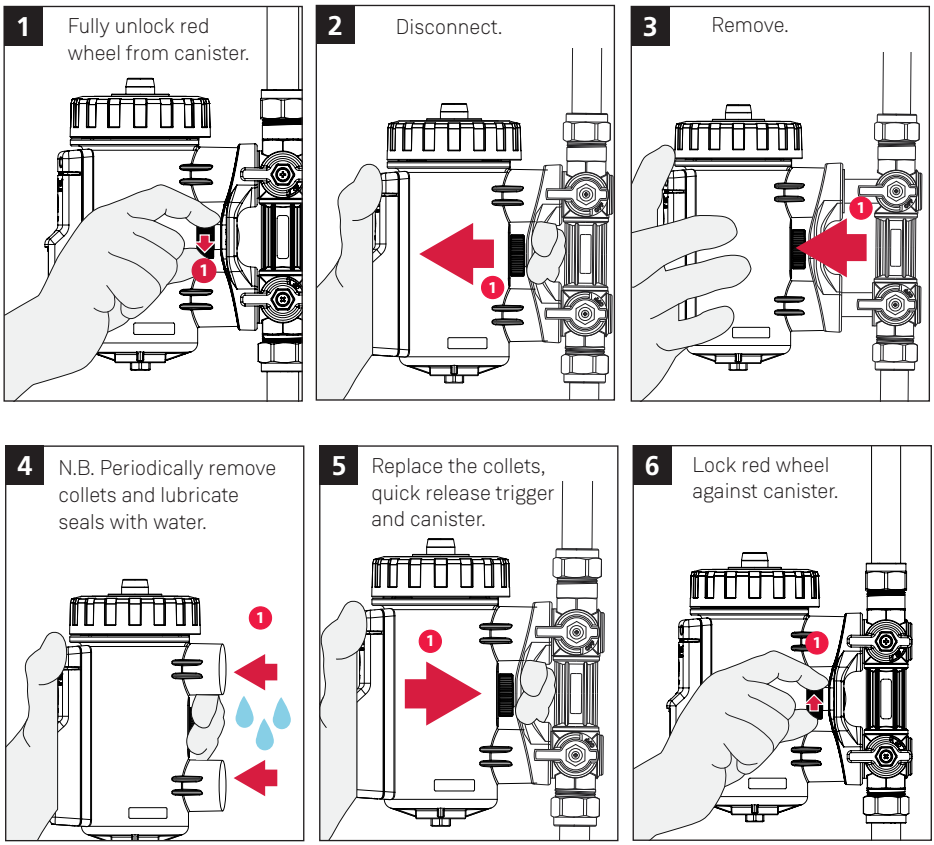

Retro-Fit Installation - Upgrade a *MagnaClean Professional2*® to a *MagnaClean Professional3 Sense* using the simple instructions below:

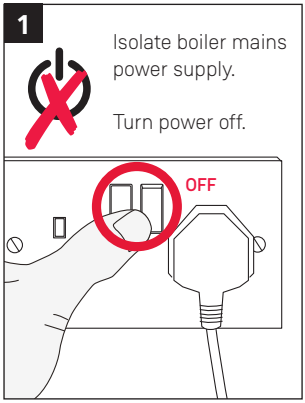

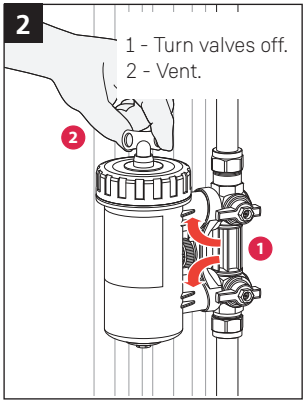

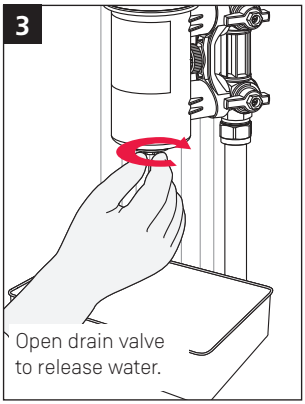

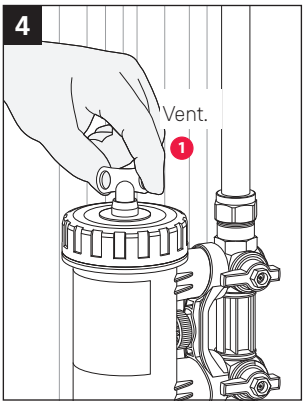

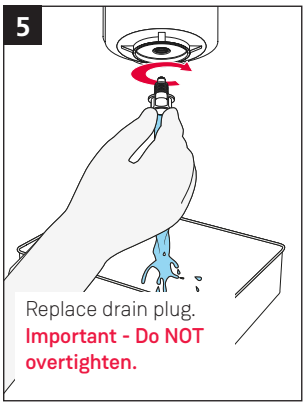

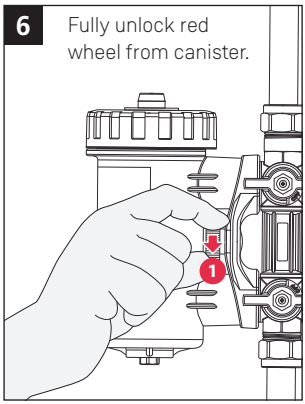

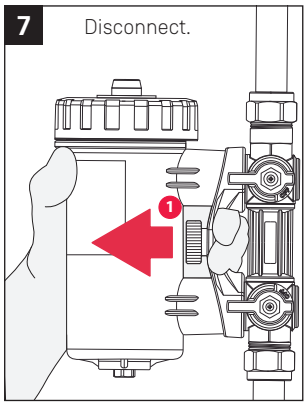

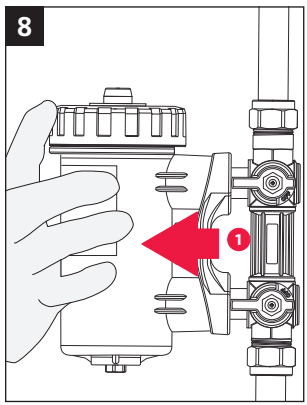

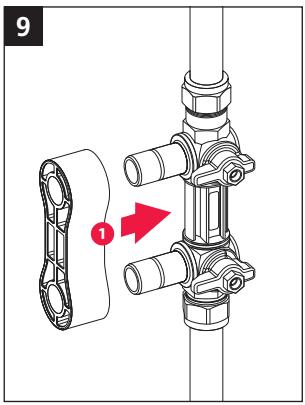

10

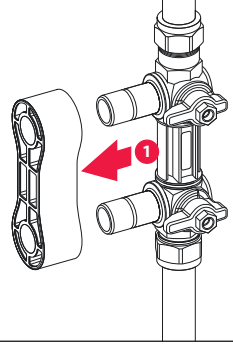

11

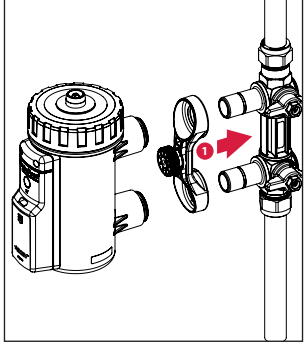

12

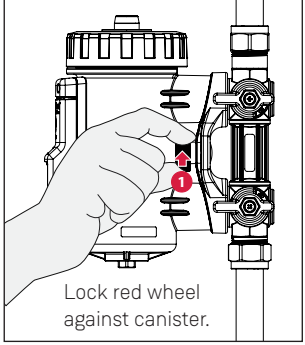

Lock red wheel against canister.

13

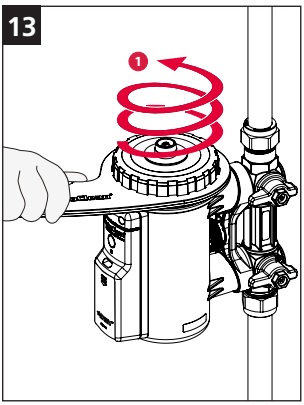

14

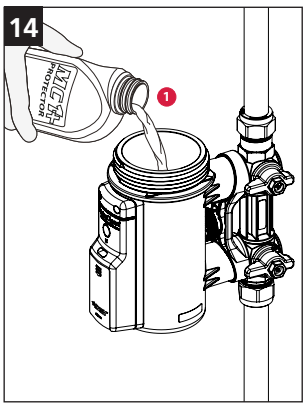

15

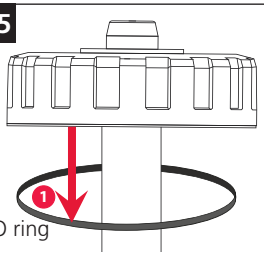

O ring

The lid seal should be checked for wear when servicing *MagnaClean*®. It is Best Practice to replace the lid seal at each service

16 Hand tighten.

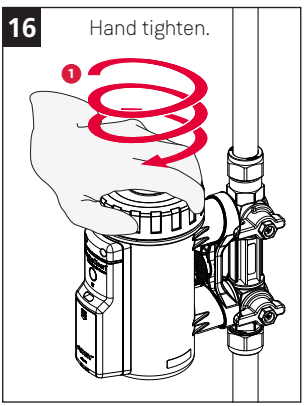

17 Tighten by a ¼ turn. **Important - Do NOT overtighten.**

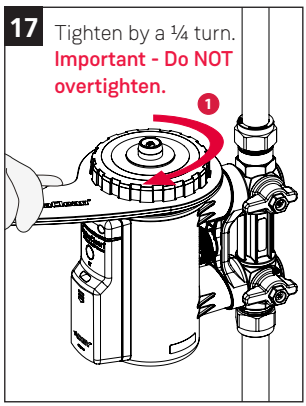

18

Set filter to clean mode. Press and hold button for 6 seconds using the reset tool provided.

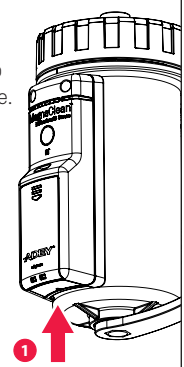

Then follow the In App Filter Set-up instructions on page 3.

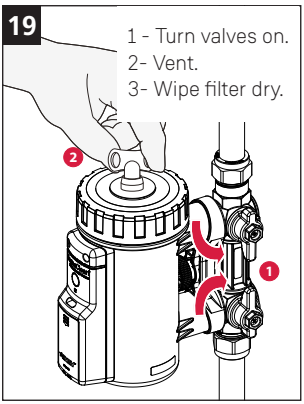

Frequently asked questions

Where do I download the App from?

The ADEY ProClub App is available to download for free from the Google Play or App store.

What do I do if I've forgotten my password?

Click on 'forgotten password' in the App and follow the on-screen instructions to reset your password.

How do I register the product warranty?

The product warranty is registered automatically as part of the product set up via the App. A warranty confirmation email will be sent to the installer and homeowner. If the homeowner wants proof that their product warranty has been registered you must enter their email address as part of the product set up on the App.

How do I know if the product has been successfully connected to the homeowner's Wi-Fi?

Once the product has successfully connected it will appear in your App filter dashboard. You can view the status of all of your filter stock at anytime by clicking on the customer name within the App.

What happens if the Wi-Fi drops out?

The product has an internal memory that will store data readings. All unsent readings will be transferred to the ADEY database when the Wi-Fi connection is restored.

Can the homeowner have visibility of their filter performance?

Yes, we have developed an App designed specifically for the homeowner which simply tells them the status of magnetite build-up within their filter. They can download the *MagnaClean Sense* HomeZone App from the Google Play or App store.

How secure is the homeowner's Wi-Fi password?

The homeowner's Wi-Fi password is entered in order to connect the filter to the router. It is not stored by the ADEY Proclub App and cannot be accessed by the installer after filter set up. The homeowner can enter the password at this stage of connection if they do not wish to share the password with the installer.The filter is securely encrypted to ensure the Wi-Fi password cannot be retrieved after setup.

What do I do if I can't get the product to connect?

If the product will not connect after 3 attempts, it is recommended to perform a factory reset. Access this via the ADEY ProClub App menu and follow the on-screen instructions.

It is also good practice to check the signal strength of the homeowner's Wi-Fi router from the intended product position before installation. This can be easily checked by asking the homeowner to check the signal strength on their phone from the intended product installation position.

How do I manage my filter stock within the App?

Upon set up of a *MagnaClean Professional3 Sense* you can manually choose how the filter will appear in your job dashboard. We recommend using the customer's name as it will make it easy to manage each filter within your job records.

Does the App store the homeowner's system details for future reference?

The homeowner's system details are stored within the 'Job records' section of the App and can be referenced at any time prior to attending an onsite visit.

What are the Wi-Fi connectivity limitations?

The *MagnaClean Professional3 Sense* should be installed so that it can communicate wirelessly with the router (up to a maximum distance of 30m). The home's construction and arrangement may affect the communication range. Metal objects such as refrigerators and freezers, hot water cylinders, foil lined plaster board walls, radiators and even thick brick walls, may reduce the Wi-Fi operational range of the filter.

It is important to check the Wi-Fi strength at the proposed location of the filter **before** installation.

Technical specification

Operating Parameters:

Internal water operating temperature: 3°C to 95°C
Internal operating water pressure: Up to 6 bar
Recommended ambient room temperature: 3°C to 35°C
Maximum flow rate: 50L/min
Flow direction: Bi-directional
Fluid capacity: 0.55 litres
Inlet: 22mm compression at valve
Outlet: 22mm compression at valve

Electronic sub-assembly:

Enclosure rated to IP52 specification
Battery powered: 2x AA alkaline batteries

Important

CAUTION:

MagnaClean filter contains a strong magnet. Keep away from all electrical devices, bank cards and other magnetic devices.

MagnaClean filter contains a strong magnet. Caution should be taken at all times when handling if you have a pacemaker fitted.

MagnaClean filter is a pressurized device. Always release pressure before servicing.

Unit may be hot in operation. Handle with care.

Keep water away from battery compartment.

Risk of explosion if battery is replaced by an incorrect type.

Dispose of used batteries according to the instructions.

As a WEEE producer, ADEY Innovation Ltd are obligated to finance the collection, treatment & recovery of WEEE, and our compliance under these regulations is ensured via our work with our WEEE Compliance Scheme of choice, B2B Compliance.

THIS PRODUCT COMPLIES WITH CURRENT EU PRODUCT LEGISLATION

IMPORTANT Always follow the Standard Electrical Best Practice guidelines when installing a *MagnaClean* filter. A copy of these can be found at http://www.hse.gov.uk/electricity

For the most up to date version of the *MagnaClean Professional3 Sense* Installation and Servicing instructions visit adey.com. Warranty Terms & Conditions can be found at adey.com

KE KELIT®
CLIMATE CONTROL SYSTEMS

KE KELIT NZ Ltd.
0800 4 KE KELIT
0800 4 5353548
climatecontrol@kekelit.co.nz
www.kekelit.co.nz

ADEY®

Telephone: +44 1242 546717 Email: info@adey.com
www.adey.com

Produced from recycled material
A carbon neutral company

All ADEY marks are trademarks of Adey Holdings (2008) Limited. Please visit adey.com/trademarks for a list of ADEY marks
Copyright Adey Holdings (2008) Limited © 2018. All rights reserved.

M03808 LF2-01-03577 v1